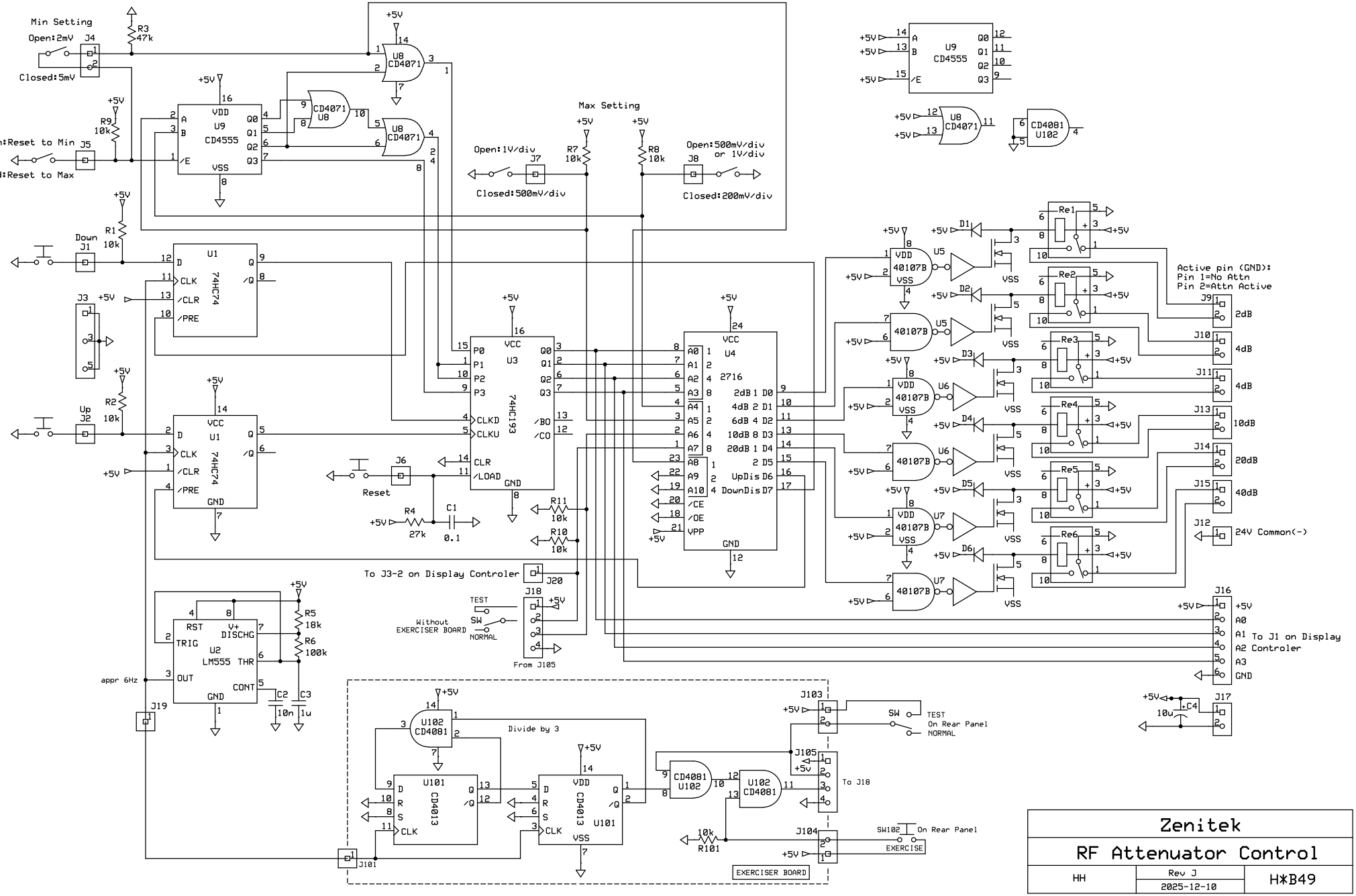

Zenitek		
RF Attenuator Control		
HH	Rev J 2025-12-10	H*B49

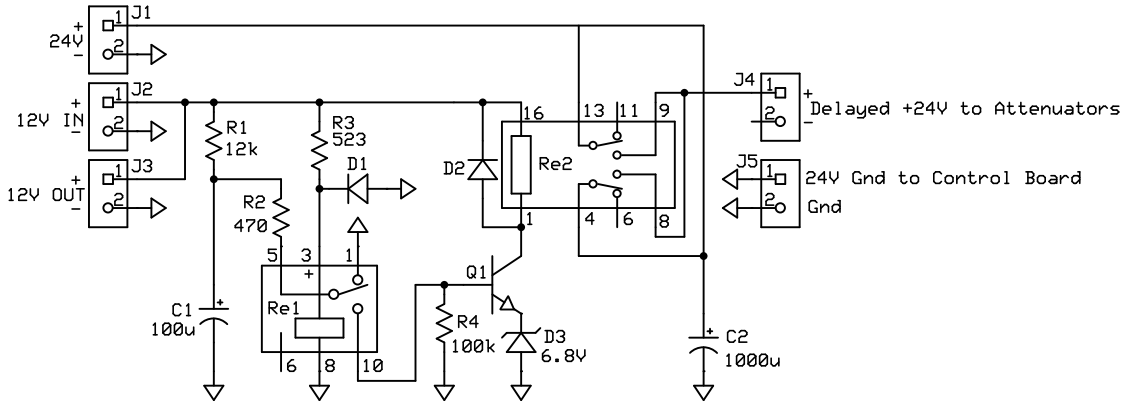

Zenitek		
RF Attenuator Power On Delay		
HH	2023-07-11	H*A49-2

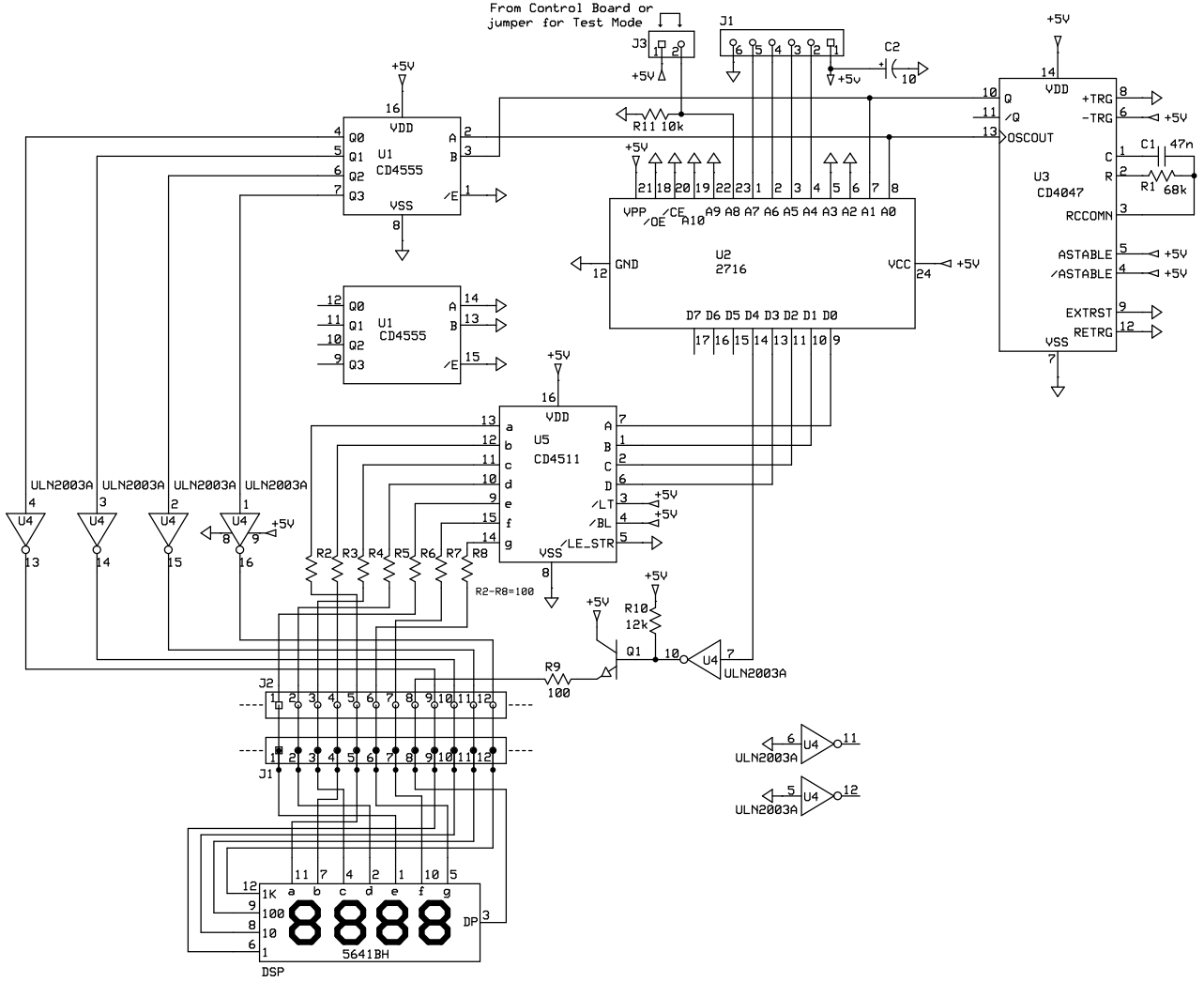

Zenitek		
4 digit 7 segment Display Driver		
HH	Rev A 2023-05-03	H*50-1 H*A50-1