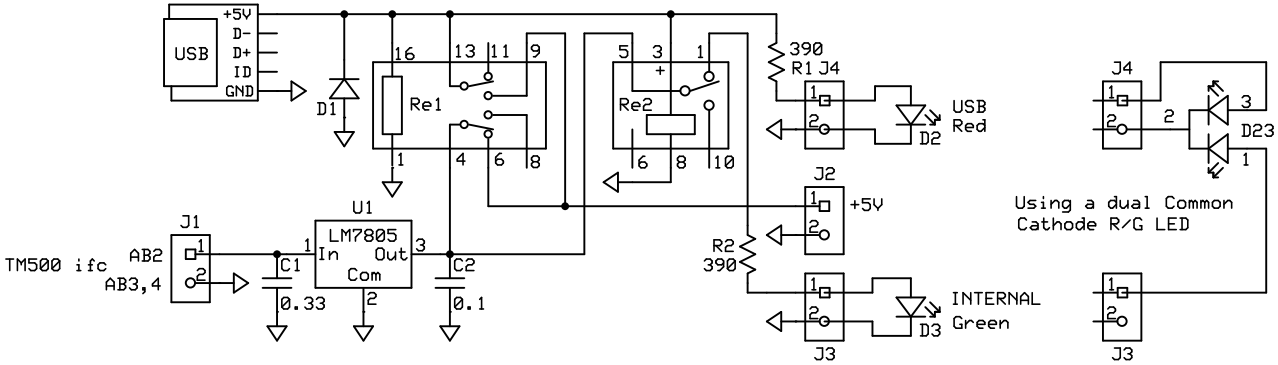


| Zenitek | | |
|---|---|---|
| H*69 USB/TM Power Selector | | |
| HH | 2025-04-18 | |